T3A90L-4 1,5KW 400/690V B14

Three-phase asynchronous motor in aluminum

Motor type	T3A90L-4 1,5KW 400/690V B14
Brand	BUSCK
Item number	93B40913

Voltage V	Power kW	Frequency Hz	Current A	Speed rpm
400	1,5	50	3,6	1445
690	1,5	50	2,07	1445
460	1,73	60	3,6	1734

Duty	S1	Efficiency class	IE3
Enclosure	IP55	Efficiency, load 100%	85,7
Insulation class	F	Efficiency, load 75%	86
Cooling	IC411 (TEFC)	Efficiency, load 50%	84,3
Max. ambient temp.	40°C	Power fact, load 100%	0,72
Min. ambient temp.	-20°C		
Max. temp. rise	80 K	Painting	Standard
Max altitude, masl	1000	Color	RAL 9005
		Weight kg	18
Torque, Nm	9,9	Sound pressure Lp dB(A)	72
Starting torque ratio	3,9	Bearing DE	6205-2Z/C3
Pull up torque ratio	2,56	Bearing NDE	6205-2Z/C3
Pull out torque ratio	3,47	Balance grade	Normal
Starting current ratio	7,2	Inertia kgm2	0,0022
Winding protection	Thermocontacts	Cable entries	1xM20
Note	IE3, Termokontakter		

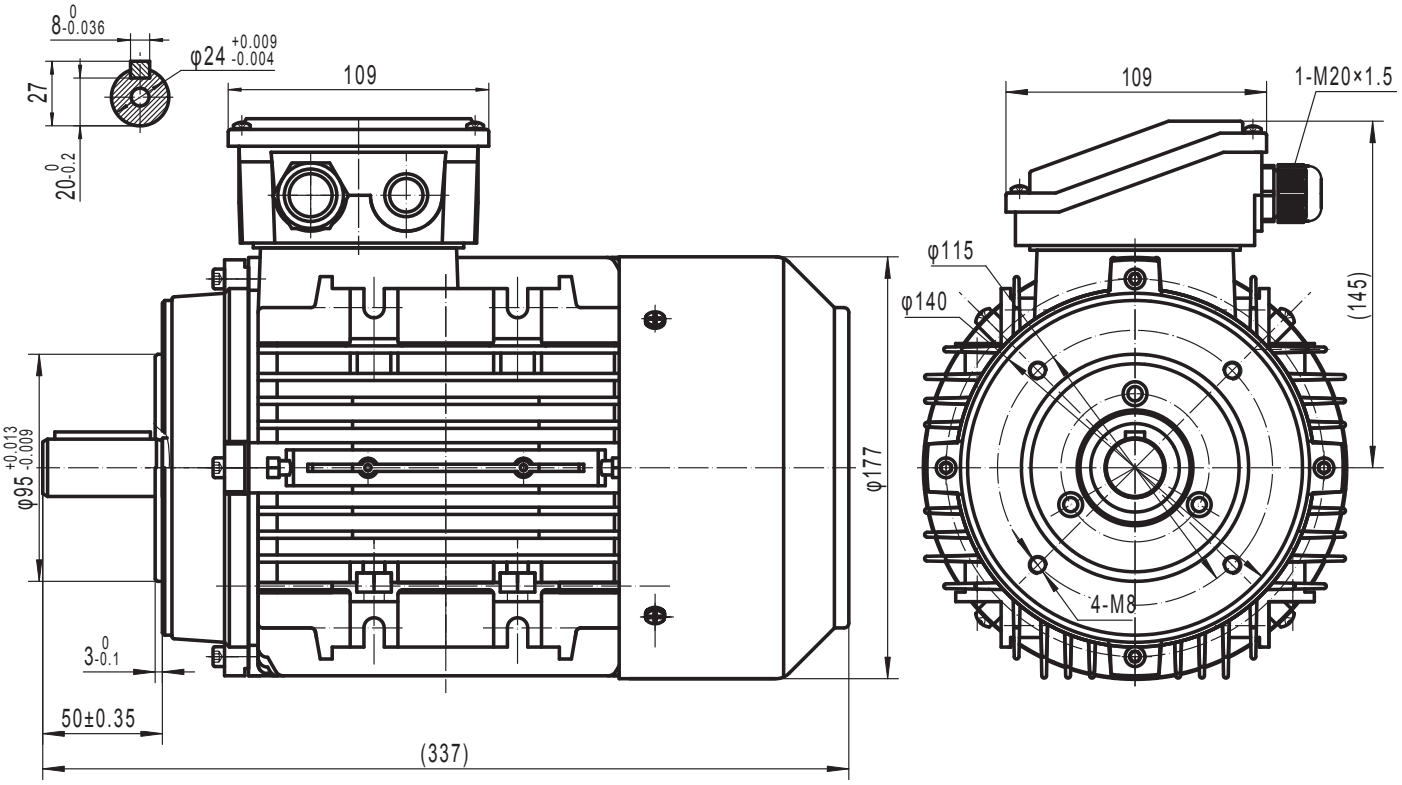

BUSCK
www.busck.eu

Busck & Co AB
Gamla Riksvägen 14
428 32 Göteborg
Sweden
556027-1990
info@busck.se

Busck & Co ApS
Postboks 108
0900 København C
Denmark
info@busck.eu

Busck AS
Skibåsen 35C
4636 Kristiansand
Norway
info@busck.no