# T3A132M-4 7,5KW 230/400V B5

## Three-phase asynchronous motor in aluminum

| | |
|---|---|
| Motor type | T3A132M-4 7,5KW 230/400V B5 |
| Brand | BUSCK |
| Item number | 93A41332 |

| Voltage V | Power kW | Frequency Hz | Current A | Speed rpm |
|---|---|---|---|---|
| 230 | 7,5 | 50 | 24,9 | 1460 |
| 400 | 7,5 | 50 | 14,3 | 1460 |
| 460 | 8,63 | 60 | 14,3 | 1752 |

| | | | |
|---|---|---|---|
| Duty | S1 | Efficiency class | IE3 |
| Enclosure | IP55 | Efficiency, load 100% | 90,4 |
| Insulation class | F | Efficiency, load 75% | 90,9 |
| Cooling | IC411 (TEFC) | Efficiency, load 50% | 90,3 |
| Max. ambient temp. | 40°C | Power fact, load 100% | 0,84 |
| Min. ambient temp. | -20°C | | |
| Max. temp. rise | 80 K | Painting | Standard |
| Max altitude, masl | 1000 | Color | RAL 9005 |
| | | Weight kg | 57,4 |
| Torque, Nm | 49,1 | Sound pressure Lp dB(A) | 71 |
| Starting torque ratio | 2,6 | Bearing DE | 6308-2Z/C3 |
| Pull up torque ratio | 2,2 | Bearing NDE | 6208-2Z/C3 |
| Pull out torque ratio | 3,4 | Balance grade | Normal |
| Starting current ratio | 8,9 | Inertia kgm2 | 0,0435968 |
| Winding protection | Thermocontacts | Cable entries | 2xM25, 1xM16 |
| Note | IE3, Termokontakter | | |

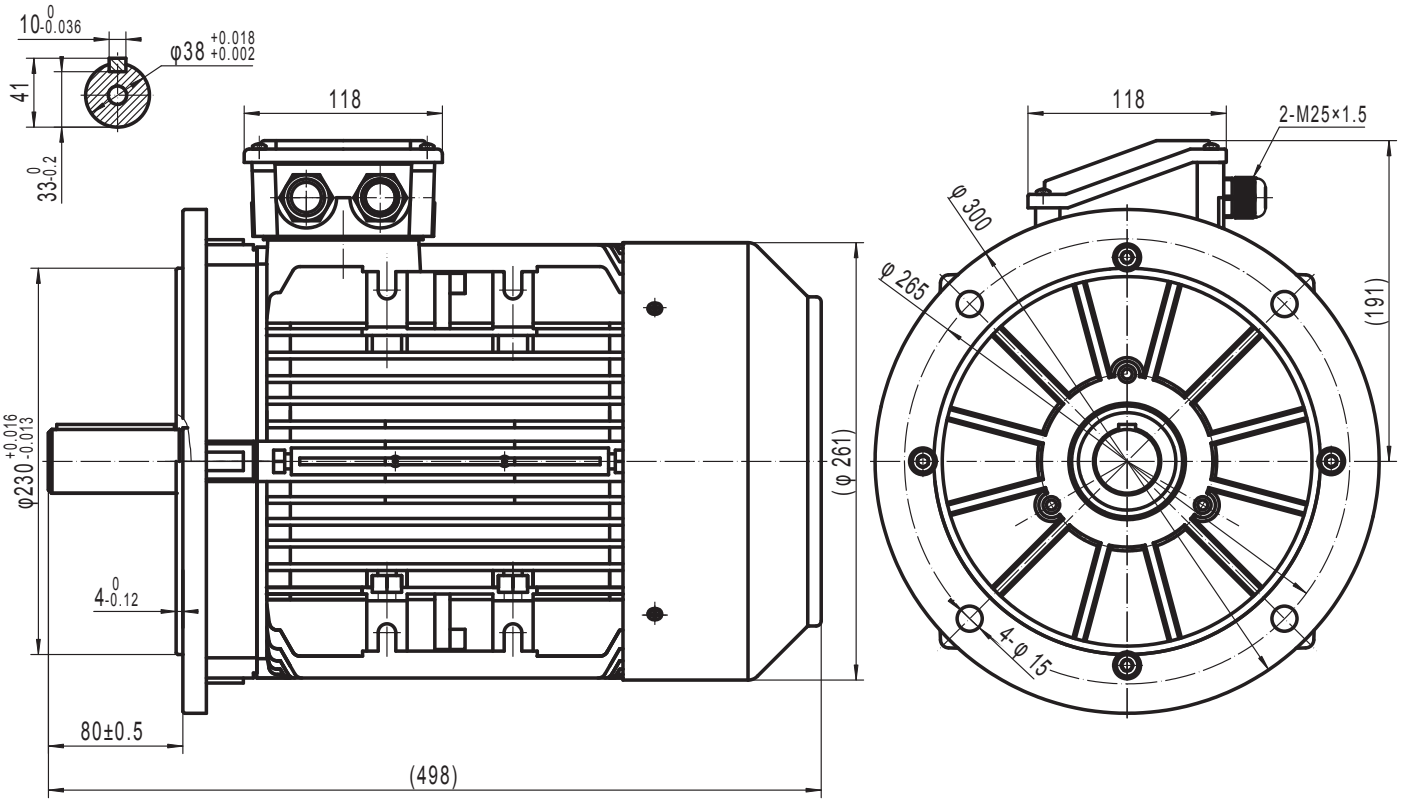



BUSCK
www.busck.eu

Busck & Co AB
Gamla Riksvägen 14
428 32 Göteborg
Sweden
556027-1990
info@busck.se

Busck & Co ApS
Postboks 108
0900 København C
Denmark
info@busck.eu

Busck AS
Skibåsen 35C
4636 Kristiansand
Norway
info@busck.no